GLR 5HBSM C

GLORIOUS Tap Range
Glorious 5 Hole Bath Shower Mixer Chrome

Specification

Product Type:	Taps
Main Construction Material:	Brass
Mount Type:	Deck
Handle Type:	Crosshead
Connection Inlet:	3/4" BSP threaded tail
Connection Outlet:	N/A
Number of Tap Holes:	5
Valve/Cartridge Type:	3/4 Ceramic Disc Valve 1/4 Turn
Plumbing System Requirements:	Suitable for high pressure systems
Minimum Dynamic Pressure (bar):	1 bar
Maximum Dynamic Pressure (bar):	5 bar
Maximum Hot Water Temperature °C:	60°C
Maximum Static Pressure (bar):	10 bar
Flow Type:	Single
Isolation Included:	No

Features:

- Long life and easy to use 1/4 turn ceramic disc valves
- Metal back nuts for added durability
- Includes 2m hose and rub-clean anti-limescale handset
- Minimum working pressure of 1.0 bar

Product Certifications:

Unified Water Label 11.3 l/min

For more products, visit our website: http://www.bristan.com

Dimensions (measurements in mm)

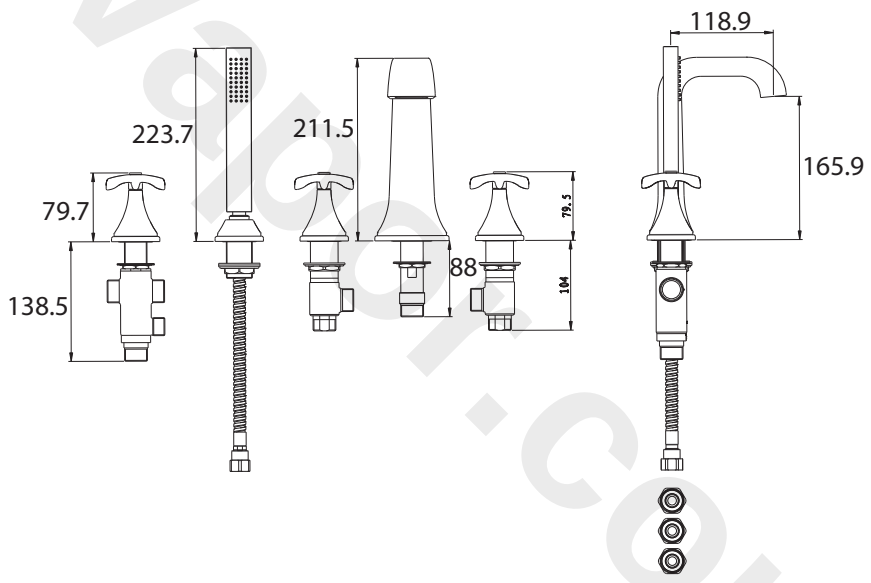

Flow Rates (l/min)

System Pressure (bar)	1	2	3	5
Through Bath Filler (mixed)	31.3	44.9	55.5	71.6
Through Handset (mixed)	6.1	9.3	11.3	14.6

TECHNICAL DATA SHEET

TOP QUALITY 5 YEARS GUARANTEED

TOP QUALITY 10 YEARS GUARANTEED *

BRISTAN

D3

Bristan, Birch Coppice Business Park, Dordon, Tamworth, B78 1SG. Web Site: www.bristan.com Telephone: 0330 026 6273. Email: enquire@bristan.com.

*** - 10 year guarantee applies to products purchased on or after 01/04/2021. Non-chrome product finishes carry a 3 year guarantee on finish.** See www.bristan.com/guarantees for more information. The information contained on this page was correct at date of issue. Fitting Dimensions are provided as a guide only. Some variation may occur due to manufacturing tolerances. Bristan pursues a policy of continuous improvement in design and performance of its products and so reserves the right to change specifications without prior notice.

www.divapor.com